MULLER MACHINES SA
BRÜGG/BIENNE

Industriestrasse 22
CH-2555 Bruegg

T +41 32 373 34 44
F +41 32 373 48 27

E sales@mullermachines.ch
W www.mullermachines.ch

Inventarnummer: 21969

3-Achsen Bearbeitungszenter
FINETECH SMV 1370 H3L
FANUC 0i-MF Plus
2022

Technische Daten

Anzahl Achsen total	3
Tischlänge	1450 mm
Tischbreite	700 mm
Anzahl T-Nuten:	5
Abstand der T-Nuten	100 mm
T-Nutenbreite	18 mm
Max. Werkstückgewicht auf dem Tisch	1500 kg
Längsweg (X-Achse)	1300 mm
Querweg (Y-Achse)	700 mm
Vertikalweg (Z-Achse)	700 mm
Werkzeugmagazin Anzahl Werkzeugplätze	30
Werkzeugaufnahme: BT	40
Abstand zwischen Spindelnase und Tisch	130 - 830 mm
Spindeldrehzahl:	
Stufenlos	
von	0 U/min
bis	12000 U/min
Eilgang: Längs	24 m/min
Eilgang: Quer	24 m/min
Eilgang: Vertikal	2 m/min
Spindelmotor	18.5 kW
Gesamtleistungsbedarf	45 kVA
Maschinengewicht ca.	9000 kg
Abmessungen Maschine:	
Länge	3650 mm

Breite	2220 mm
Höhe	2560 mm

Diverses Zubehör:

Lineare Achsen Direktangetrieben	
Kühlmitteleinrichtung	
Kühlmittel durch die Spindel (IKZ)	20 bar
Ausblasvorrichtung für Spindelkonus	
Späneförderer	
Elektronisches Handrad	
Beleuchtung	
Spindelkühlung	
Spindelölkühler	
Spülpistole	
Blaspistole	
Automatisches Ausschalten	
Zentralschmierung	
Schaltschrank Klimagerät	
Zustandsleuchte	


Finetech

Internationally Recognized Machine Tools From Finetech

From its beginnings in 1979, Finetech has been one of the top machine tool manufacturers in the world. Finetech manufactures a wide range of CNC vertical machining centers. Finetech's machines are built to deliver high speed with more accuracy, efficiency and durability with more standard features, high-tech innovations and solid engineering.

Every Finetech machine is designed to provide more flexibility and productivity, making for a very sound investment.

Finetech

Extensive Quality Control

Before shipping, each machining center from Finetech is subject to rigorous quality inspections during assembly. If it does not measure up to our standards, it does not leave our factory. Our objective is to ensure that each machine will provide optimum performance and fully satisfy customers.

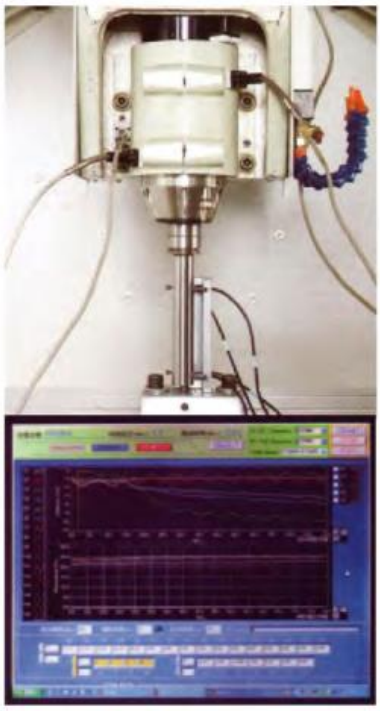

SPINDLE DYNAMIC BALANCE TESTING

After machine assembly, the spindle is re-balanced to ensure smooth operation.

SPINDLE THERMAL GROWTH TESTING

Each spindle is tested through the complete speed range and thermal growth is measured to ensure the spindle is within normal values.

FINAL TEST CUT

Dynamic cutting process test ensures precision and performance of machine.

CALIBRATION

Every Finetech machine is laser calibrated for pitch error compensation and backlash.

BALL BAR TESTING

Every machine is put through a Dynamic Ballbar test to test circularity and reversal spike errors.

Extensive Quality Control During Assembly

SPINDLE TRAM

Every spindle mount is hand scraped to ensure accurate alignment of the spindle to worktable.

BALLSCREW ALIGNMENT

The ballscrew bearing mounts are aligned using a precision test mandrel.

The mounting surface is hand scraped to ensure a highly precise alignment.

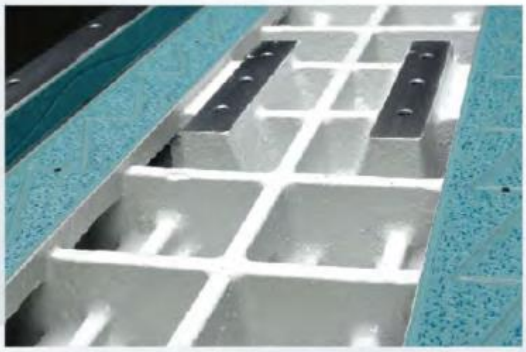

GUIDEWAYS ARE FITTED WITH "TURCITE B"

Box way type machines are hand scraped and set matched to ensure high geometric accuracy.

STRAIGHTNESS

Every linear guideway has a precision ground mounting surface and is checked using a high precision Granite straight edge.

LEVEL

The machine level is continuously checked through each stage of the assembly process using precision levels.

SCREW AND LINEAR RAIL PARALLEL TEST

The straightness of the ballscrew is measured against the straightness of the linear guideway to ensure both components are parallel to each other.

THRUST BEARING ASSEMBLY

The thrust bearing housings are inspected and ground for proper clearances to allow the ballscrew to be properly supported.

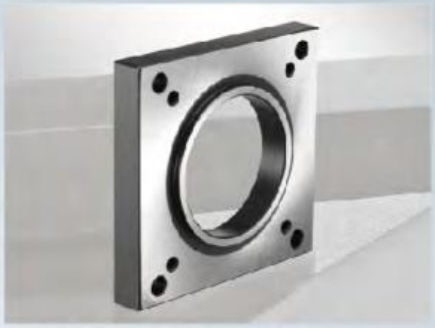

SERVO MOTOR MOUNT

Each servo motor mounting surface is ground to ensure the motor is correctly aligned to the ballscrew.

EFFICIENT AXES LUBRICATION

Each axis uses volumetric oil or grease distribution to ensure even and efficient lubrication.

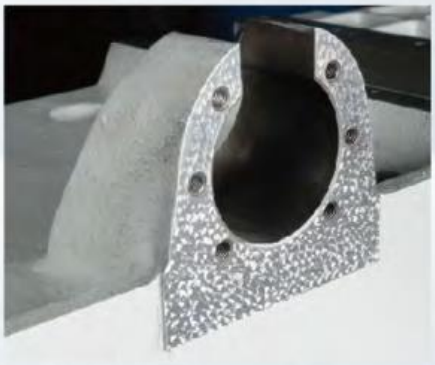

BALLSCREW MOUNT

The ball nut is hand scraped and aligned using a precision test mandrel.

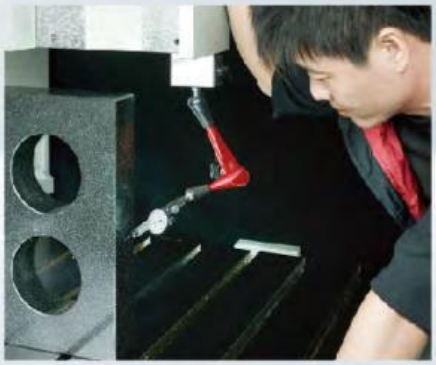

Z AXIS ALIGNMENT TEST

The Z axis is tested for accuracy using a high precision granite square in X, Z and Y, Z directions.

Excellent Mechanical Features

COOLANT-THROUGH-SPINDLE (CTS) 20-70 BAR (Optional)

Coolant-Through-Spindle provides coolant directly to the machining process through the center of the spindle. CTS may extend the life of the cutting tool and improve the evacuation of chips, especially when used for deep hole drilling and pocket milling.

SPINDLE CHILLER (Oil or Water)

The spindle chiller will help maintain a stable spindle temperature and will reduce the effects of thermal expansion of the spindle main shaft as well as extend the life of the spindle.

IN HOUSE CIRCUIT DESIGN

The Finetech R&D team can design both hardware and software components for the machine tools and allows for better quality control and quick response to customers requests.

Ø63mm EXTRA LARGE BALLSCREW

Finetech's model 1890 and larger use ø63mm ball screws to handle heavier cutting and table loads while still providing smooth motion.

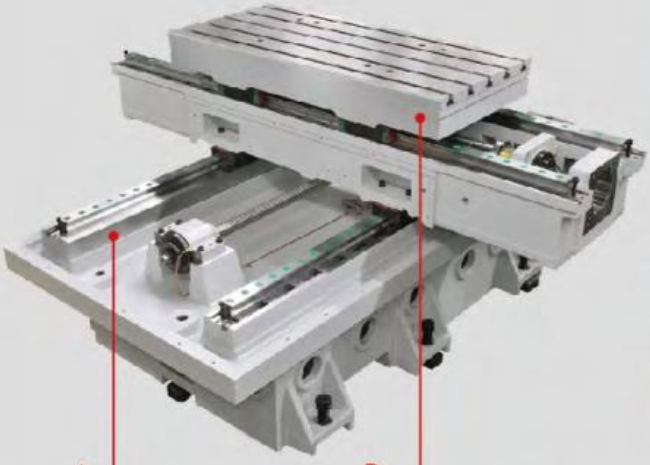

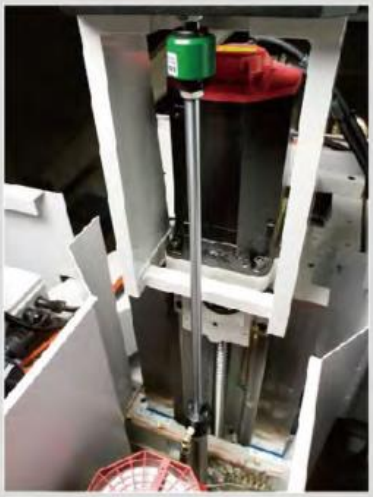

AIR COUNTER BALANCE

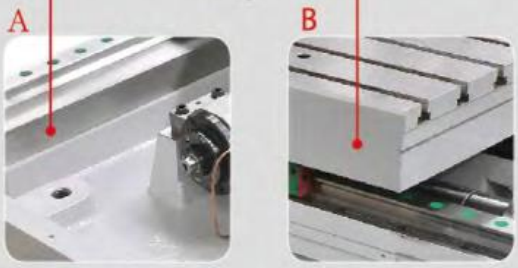

LINEAR SCALE MOUNTING SURFACE

A precision ground surface can be added to each axis to allow for easy installation of linear scales by ensuring a straight and parallel surface.

T-SLOT GRINDING

Each T-Slot is ground to a H8 tolerance to provide an accurate datum surface allowing for easy and precise machine setup.

LINEAR WAY

CNC Vertical **Machining Center**

High Speed and Precision

- The casting assembly of the SMV machining centers has been designed using a Finite-Element-Analysis process to ensure the machine will handle cutting forces and weight loads associated with the demands of the machine specifications.
- All axes use an extra wide 45mm roller type linear guideway to allow the machining center to accommodate heavy loads with fast accelerations and low friction while maintaining accurate positioning.
- The machine base and saddle base utilize a wide design to prevent sagging and overhanging concerns with heavy work piece loads.
- The Z axis casting uses a reinforced rib design to achieve structural strength through the entire casting length.
- Each axis motor is directly coupled to the ball screw.
- Each axis will use a grade C3 precision ground ball screw and will use a pre-tensioned design to improve machine performance.

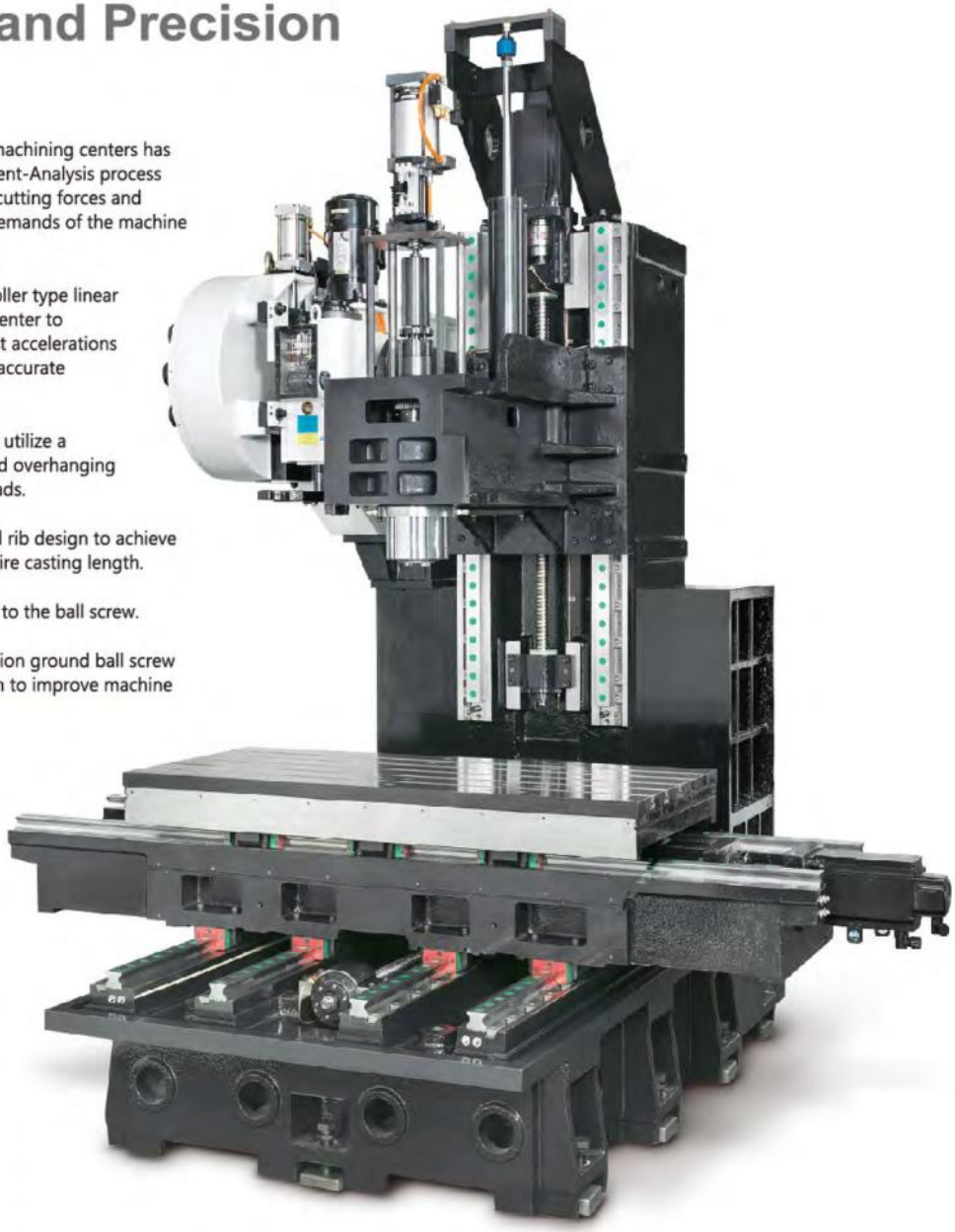

▲ SMV-1270-H3L

LINEAR WAY SERIES

▲ 610-H3L
- Travel : X610 Y400 Z460 mm
- Table : L650 × W400 mm

▲ 710-H3L
- Travel : X710 Y450 Z460 mm
- Table : L760 × W420 (500) mm

▲ 800-H3L
- Travel : X800 Y500 Z500 mm
- Table : L950 × W500 mm

▲ 850-H3L
- Travel : X850 Y600 Z650 mm
- Table : L1000 × W500 mm

▲ 1060-H3L
- Travel : X1000 Y600 Z650 mm
- Table : L1100 × W600 mm

▲ 1270-H3L
- Travel : X1200 Y700 Z700 mm
- Table : L1350 × W700 mm

▲ 1370-H3L
- Travel : X1300 Y700 Z700 mm
- Table : L1450 × W700 mm

▲ 1570-H3L
- Travel : X1500 Y700 Z700 mm
- Table : L1650 × W700 mm

▲ 1670-H3L
- Travel : X1600 Y700 Z700 mm
- Table : L1750 × W700 mm

▲ 1685-H3L
- Travel : X1600 Y850 Z850 mm
- Table : L1600 × W800 mm

▲ 2070-H3L
- Travel : X2000 Y700 Z700 mm
- Table : L2150 × W700 mm

BOX WAY

Heavy Cutting Vertical **Machining Center**

- The casting assembly of the SMV machining centers has been designed using a Finite-Element-Analysis process to ensure the machine will handle cutting forces and weight loads associated with the demands of the machine specifications.
- All axes use box way design to allow the machining center to accommodate extremely heavy loads with smooth motion while increasing dampening of vibrations and cutting force characteristics.
- The machine base and saddle base utilize a wide design to prevent sagging and overhanging concerns with heavy work piece loads.
- The Z axis casting uses a reinforced rib design to achieve structural strength through the entire casting length.
- Each axis motor is directly coupled to the ball screw.
- Each axis will use a grade C3 precision ground ball screw and will use a pre-tensioned design to improve machine performance.

▲ **SMV-2590-3B**

BOX WAY SERIES

▲ 650-3B

- Travel：X650 Y500 Z500 mm
- Table：L800 × W470 mm

▲ 1060-3B

- Travel：X1000 Y600 Z650 mm
- Table：L1100 × W500 mm

▲ 1270-3B

- Travel：X1200 Y700 Z650 mm
- Table：L1300 × W700 mm

▲ 1570-3B

- Travel：X1500 Y700 Z650 mm
- Table：L1650 × W700 mm

▲ 1670-3B

- Travel：X1600 Y700 Z650 mm
- Table：L1750 × W700 mm

▲ 1890-3B

- Travel：X1800 Y1000 Z900 mm
- Table：L1950 × W900 mm

▲ 2090-3B

- Travel：X2000 Y1000 Z900 mm
- Table：L2150 × W900 mm

▲ 2290-3B

- Travel：X2200 Y1000 Z900 mm
- Table：L2350 × W1000 mm

▲ 2590-3B

- Travel：X2500 Y1000 Z900 mm
- Table：L2600 × W1000 mm

COMBINATION WAY

Combination Type Vertical **Machining Center**

- The casting assembly of the SMV machining centers has been designed using a Finite-Element-Analysis process to ensure the machine will handle cutting forces and weight loads associated with the demands of the machine specifications.
- The X and Y axes utilize roller type linear guideways to allow the machining center to accommodate heavy work piece loads with fast accelerations and low friction while maintaining accurate positioning.
- The Z axis uses box way design to allow the machining center to dampen heavier cutting forces.
- The machine base and saddle base utilize a wide design to prevent sagging and overhanging concerns with heavy work piece loads.
- The Z axis casting uses a reinforced rib design to achieve structural strength through the entire casting length.
- Each axis motor is directly coupled to the ball screw.
- Each axis will use a grade C3 precision ground ball screw and will use a pre-tensioned design to improve machine performance.

▲ **SMV-2090-2LB**

COMBINATION WAY SERIES

▲ 1060-2LB
- Travel：X1000 Y600 Z650 mm
- Table：L1100 × W600 mm

▲ 1270-2LB
- Travel：X1200 Y700 Z650 mm
- Table：L1350 × W700 mm

▲ 1570-2LB
- Travel：X1500 Y700 Z650 mm
- Table：L1650 × W700 mm

▲ 1670-2LB
- Travel：X1600 Y700 Z650 mm
- Table：L1750 × W700 mm

▲ 1890-2LB
- Travel：X1800 Y900 Z900 mm
- Table：L1950 × W900 mm

▲ 2070-2LB
- Travel：X2000 Y700 Z700 mm
- Table：L2150 × W700 mm

▲ 2090-2LB
- Travel：X2000 Y1000 Z1000 mm
- Table：L2150 × W1000 mm

▲ 2290-2LB
- Travel：X2200 Y1000 Z1000 mm
- Table：L2350 × W1000 mm

▲ 2590-2LB
- Travel：X2500 Y1000 Z1000 mm
- Table：L2600 × W1000 mm

Optional Equipment

RENISHAW
(OMP 40/60)

BLUM (TC 50)

HEIDENHAIN
(TS 640)

RENISHAW (TS27R)

BLUM (Z3D)

HEIDENHAIN
(TT 160)

RENISHAW (NC-4)

BLUM (NT)

CTS-Coolant Through
Spindle

20/40/60/70 BAR

Spindle Oil Cooler

Oil Skimmer

Work Piece Measuring System		Tool Measuring System		CTS-Coolant Through Spindle	
	RENISHAW (OMP 40/60)		RENISHAW (TS27R)		20 BAR
	BLUM (TC 50)		BLUM (Z3D)		50 BAR
	HEIDENHAIN (TS 640)		HEIDENHAIN (TT 160)		60 BAR
			RENISHAW (NC-4)		70 BAR
			BLUM (NT)		120 BAR

Transformer

HEIDENHAIN Linear Scale

HEIDENHAIN Rotary Encoder

Gear Box

4th Axis Rotary Table

4/5th Axis Rotary Table

Chain Type Chip Conveyor

Screw Type Chip Auger

All Of Matching Checklist					
	HEIDENHAIN Linear Scale		4/5th Axis Rotary Table		Screw Type Chip Auger
	Built-in Coolant Nozzles		HEIDENHAIN Rotary Encoder		
	Oil Skimmer		Gear Box		
	Spindle Oil Cooler		Transformer		
	4th Axis Rotary Table		Chain Type Chip Conveyor		